FÖRDERANLAGEN - BELT CONVEYORS
GTK PÁSOVÉ DOPRAVNÍKY
GTK, spol s r.o., CZ-687 07 TUPESY 116, okres Uherské Hradiště, Česká republika
Tel.: +420 572 520 880-9, Fax: +420 572 520 899

Idler frames L10-205

L100/100/10-DIN 1028 / EN 10056-1 Version: 2020-06-11

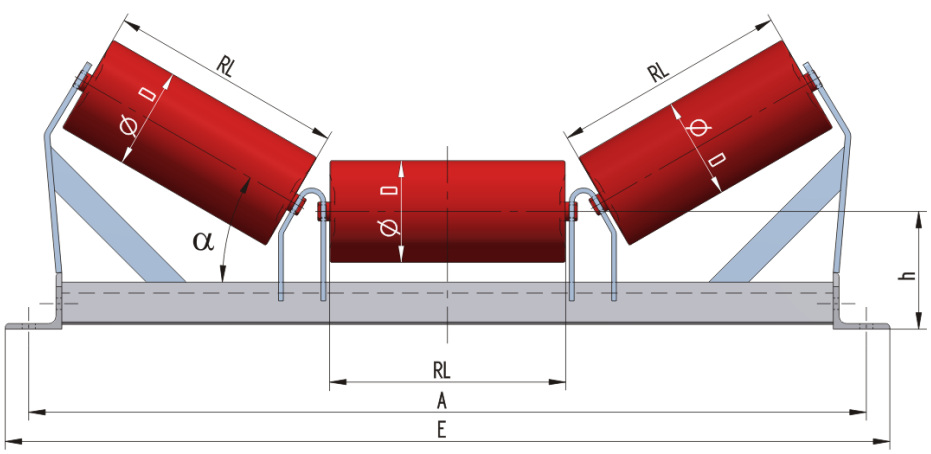

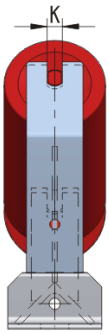

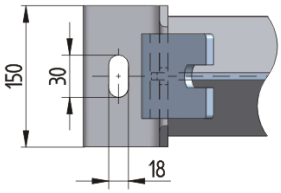

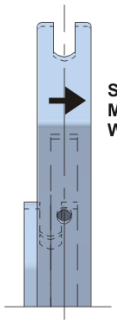

SE ŠTURCEM
MIT STURZ
WITH TILT

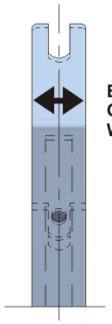

BEZ ŠTURCU
OHNE STURZ
WITHOUT TILT

BB(mm)	Inclination°	D(mm)	RL(mm)	h(mm)	A(mm)	E(mm)	m(kg)	Artikl
1200	15	133,159	465	205	1530	1590	36.00	*L1012015205*
1200	20	133,159	465	205	1530	1590	36.50	*L1012020205*
1200	25	133,159	465	205	1530	1590	37.50	*L1012025205*
1200	30	133,159	465	205	1530	1590	38.60	*L1012030205*
1200	35	133,159	465	205	1530	1590	39.90	*L1012035205*
1200	40	133,159	465	205	1530	1590	41.30	*L1012040205*
1200	45	133,159	465	205	1530	1590	42.30	*L1012045205*
1400	15	133,159	530	205	1730	1790	39.20	*L1014015205*
1400	20	133,159	530	205	1730	1790	40.30	*L1014020205*
1400	25	133,159	530	205	1730	1790	41.20	*L1014025205*
1400	30	133,159	530	205	1730	1790	42.50	*L1014030205*
1400	35	133,159	530	205	1730	1790	43.80	*L1014035205*
1400	40	133,159	530	205	1730	1790	45.00	*L1014040205*
1400	45	133,159	530	205	1730	1790	46.50	*L1014045205*
1600	15	133,159	600	205	1980	2040	43.40	*L1016015205*
1600	20	133,159	600	205	1980	2040	44.50	*L1016020205*
1600	25	133,159	600	205	1980	2040	45.50	*L1016025205*
1600	30	133,159	600	205	1980	2040	46.90	*L1016030205*
1600	35	133,159	600	205	1980	2040	48.00	*L1016035205*
1600	40	133,159	600	205	1980	2040	49.50	*L1016040205*

1600	45	133,159	600	205	1980	2040	51.20	*L1016045205*
1800	15	133,159	670	205	2180	2240	47.00	*L1018015205*
1800	20	133,159	670	205	2180	2240	48.10	*L1018020205*
1800	25	133,159	670	205	2180	2240	49.10	*L1018025205*
1800	30	133,159	670	205	2180	2240	50.80	*L1018030205*
1800	35	133,159	670	205	2180	2240	52.30	*L1018035205*
1800	40	133,159	670	205	2180	2240	53.50	*L1018040205*
1800	45	133,159	670	205	2180	2240	55.50	*L1018045205*
2000	15	133,159	750	205	2420	2490	51.20	*L1020015205*
2000	20	133,159	750	205	2420	2490	52.90	*L1020020205*
2000	25	133,159	750	205	2420	2490	53.90	*L1020025205*
2000	30	133,159	750	205	2420	2490	55.40	*L1020030205*
2000	35	133,159	750	205	2420	2490	57.20	*L1020035205*
2000	40	133,159	750	205	2420	2490	59.00	*L1020040205*
2000	45	133,159	750	205	2420	2490	60.50	*L1020045205*